Appendix Information

* Please refer to list

BUYER	ELA UOU OPE-FRONT	EMC-TRAY	PBA MAIN-LIU
SF-5100I/XEU	JC96-01685A	JC75-00062A	JC92-01155A
SF-5100PI/XEU	JC96-01685B	JC75-00075A	JC92-01155A
SF-5100I/XAR	JC96-01685L	JC75-00075A	JC92-01192C
SF-5100PI/XAR	JC96-01685D	JC75-00075A	JC92-01192C
SF-5100I/XEG	JC96-01685G	JC75-00062A	JC92-01192D
SF-5100PI/XEG	JC96-01685H	JC75-00075A	JC92-01192D
SF-5100I/XSA	JC96-01685N	JC75-00062A	JC92-01192E
SF-5100PI/XSA	JC96-01685P	JC75-00075A	JC92-01192E
SF-5100I/XEF	JC96-01685L	JC75-00062A	JC92-01192A
SF-5100PI/XEF	JC96-01685M	JC75-00075A	JC92-01192A
SF-5100PI/XAC	JC96-01685Y	JC75-00075A	JC92-01192C
SF-5100I/XIL	JC96-01685J	JC75-00062A	JC92-01192C
SF-5100PI/XIL	JC96-01685K	JC75-00075A	JC92-01192C
SF-5100I/XEP	JC96-01685U	JC75-00062A	JC92-01155A
SF-5100PI/XEP	JC96-01685V	JC75-00075A	JC92-01155A
SF-5100I/XET	JC96-01685Q	JC75-00062A	JC92-01155A
SF-5100PI/XET	JC96-01685R	JC75-00075A	JC92-01155A
SF-5100I/XEC	JC96-01685S	JC75-00062A	JC92-01155A
SF-5100PI/XEC	JC96-01685T	JC75-00075A	JC92-01155A
SF-5100I/EUE	JC96-01685C	JC75-00062A	JC92-01155A
SF-5100PI/EUE	JC96-01685Y	JC75-00075A	JC92-01155A
SF-5100I/TEG	JC96-01685G	JC75-00062A	JC92-01192D
SF-5100PI/TEG	JC96-01685H	JC75-00075A	JC92-01192D
SF-5100I/XIL	JC96-01685J	JC75-00062A	JC92-01192C
SF-5100PI/XIL	JC96-01685K	JC75-00075A	JC92-01192C
SF-5100I/XFA	JC96-01685C	JC75-00062A	JC92-01192C
SF-5100PI/XFA	JC96-01685Y	JC75-00075A	JC92-01192C
SF-5100I/XSG	JC96-01685C	JC75-00062A	JC92-01192C
SF-5100PI/XSG	JC96-01685Y	JC75-00075A	JC92-01192C

6. Exploded Views and Parts Lists

6-1 Main Assembly

6-2 Shield Engine Unit Assembly

6-3 Engine/Frame Lower Assembly

6-4 Fuser Assembly

6-5 RX Drive Unit Assembly

6-6 Holder Feed Unit Assembly

6-7 Plate-Upper Unit Assembly

6-8 OPE-Front Unit Assembly

6-9 Cradle Unit Assembly

6-10 Handset Assembly

6-11 Packing Assembly

6-1 Main Assembly

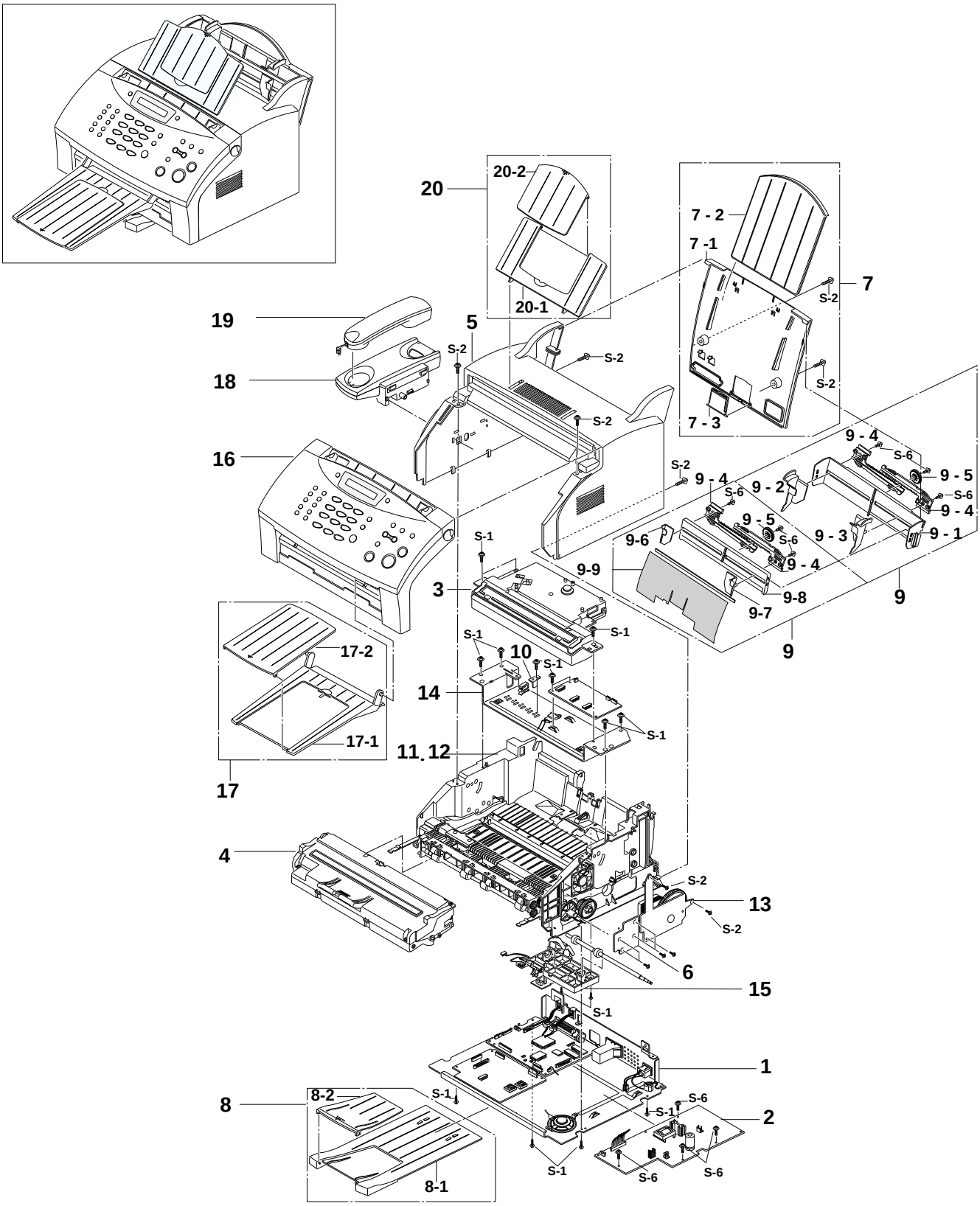

Main Assembly Parts Lists

LOCATION NO		.Description	CODE NO.	Q'TY	SA	Remark
1		ELA HOU-SHIELD ENGINE	*	1		
2		PBA-SMPS	JC44-00006A	1	O	For 220V
		PBA-SMPS	JC44-00004A	1	O	For 110V
3		UNIT-LSU	JC59-00002A	1	O	
4		ELA UNIT-DEVE PUBLIC	*	1		
5		PMO-COVER TOP	JC72-00128A	1	O	
6		IRP-BRACKET FUSER DRV	JC70-00108A	1	O	
7		MEC-COVER_REAR	JC75-00059A	1	O	
	7-1	PMO-COVER_REAR	*	1		
	7-2	PMO-TRAY_LARGE	*	1		
	7-3	PMO-COVER_BATT	*	1		
8		MEC-STACKER	JC75-00060A	1	O	
	8-1	PMO-STACKER_MAIN	*	1		
	8-2	PMO-STACKER_SUB	*	1		
9		MEC-TRAY	refer the information	1	O	
	9-1	PMO-TRAY_AUTO	*	1		
	9-2	PMO-ADJUST_AUTO,L	*	1		
	9-3	PMO-ADJUST_AUTO,R	*	1		
	9-4	PMO-GEAR-ADJUST RACK	*	2		
	9-5	PMO-GEAR-PINION	*	1		
	9-8	TRAY MANUAL, PA	*	1		
	S-6	SCREW-TAPTITE	*	3		
9		MEA UNIT-TRAY (P)	refer the information	1	O	
	9-1	PMO-TRAY_AUTO	*	1		
	9-2	PMO-ADJUST_AUTO,L	*	1		
	9-3	PMO-ADJUST_AUTO,R	*	1		
	9-4	PMO-GEAR-ADJUST RACK	*	4		
	9-5	PMO-GEAR-PINION	*	2		
	9-6	PMO-ADJUST MANUAL, L	*	1		
	9-7	PMO-ADJUST MANUAL, R	*	1		
	9-8	TRAY MANUAL, PA	*	1		
	9-9	GUIDE-FILM PAPER	*	1		
	S-6	TAPTITE-SCREW	*	6		
10		IPR-PLATE_CHANNEL	JC70-00058A	1	O	
11		ELA HOU-ENGINE ASS'Y	*	1		
12		ELA HOU-FRAME LOWER	JC96-01686A	1	O	For 110V
		ELA HOU-FRAME LOWER	JC96-01687A	1	O	For 220V
13		MEC-RX DRIVE	JC75-00085A	1	O	
14		MEC-PLATE-UPPER	JC75-00057A	1	O	
15		MEC-HOLDER FEED	JC75-00055A	1	O	
16		ELA HOU OPE-FRONT	refer the information	1	O	
17		MEC-STACKER RX	JC75 00084A	1	O	
18		MEC-CRADLE	JC75-00083A	1	O	
19		ELA HOU-HANDSET	JC96-01629A	1	O	
20		MEA UNIT-CHUTE ASS'Y	JC97-01187E	1	O	
S-1		TAPTITE-SCREW	*	12		
S-2		TAPTITE-SCREW	*	15		
S-6		TAPTITE-SCREW	*	4		

SA : Service Avail

6-2 Shield Engine Unit Assembly

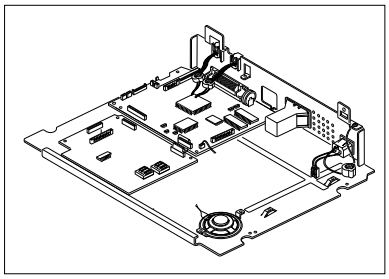

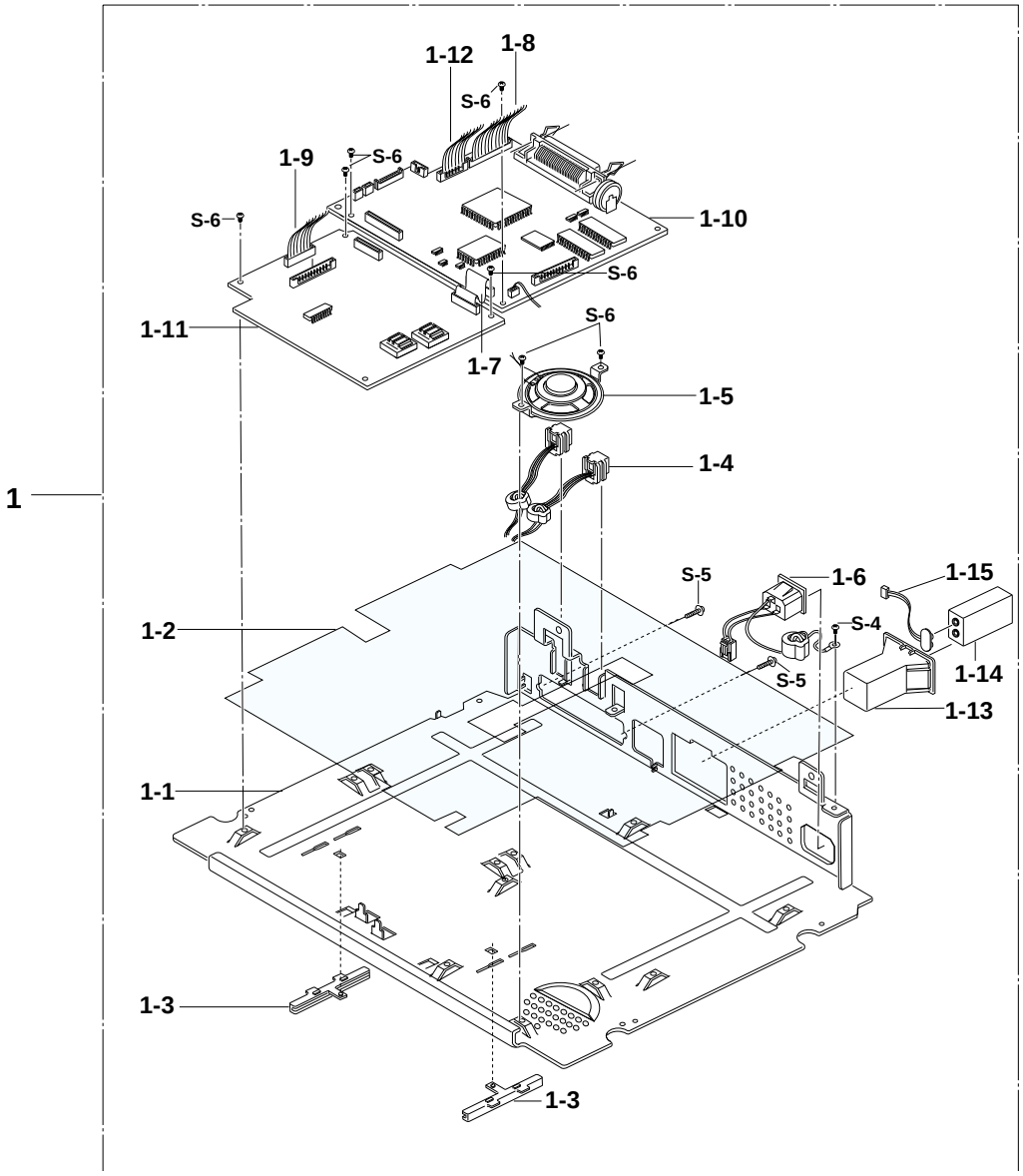

Shield Engine Unit Assembly Parts Lists

LOCATION NO		.Description	CODE NO.	Q'TY	SA	Remark
1		ELA UNIT ENGINE ASSY	*	1		
	1-1	IPR-SHIELD-ENGINE	JC70-00037A	1	O	
		IPR-SHIELD-ENGINE	JC70-00037B	1	O	For SF-5100T
	1-2	PCT-INSULATOR SMPS	JC72-00218A	1	O	
	1-3	PMO-GUIDE STACKER	JC72-00171A	2	O	
	1-4	CBF HARNESS-MODULA	JC39-00058A	1	O	
	1-5	ELA M/MEDIO AUD-SPEAKER	JC96-01607A	1	O	
	1-6	POWER-INLET	JC39-40022A	1	O	
	1-7	CABLE-FLAT	3809-001161	1	O	
	1-8	CBF HARNESS-LSU	JC39-00043A	1	O	
	1-9	CBF HARNESS-LIU/HOOK	JC39-00048A	1	O	
	1-10	PBA MAIN-MAIN	JC92-01152A	1	O	
	1-11	PBA MAIN-LIU	refer the information	1	O	
	1-12	CBF HARNESS-MAIN/HVPS	JC39-00047A	1	O	
	1-13	PMO-CASE BATTERY	JC72-00181A	1	O	For SF-5100T
	1-14	BATTERY		1		For SF-5100T
	1-15	CBF HARNESS-BATTERY		1		For SF-5100T
	S-4	SCREW-MACHINE	*	1		
	S-5	SCREW-TAPTITE	*	2		
	S-6	SCREW-TAPTITE	*	7		

SA : Service Avail

6-3 Engine/Frame Lower Assembly

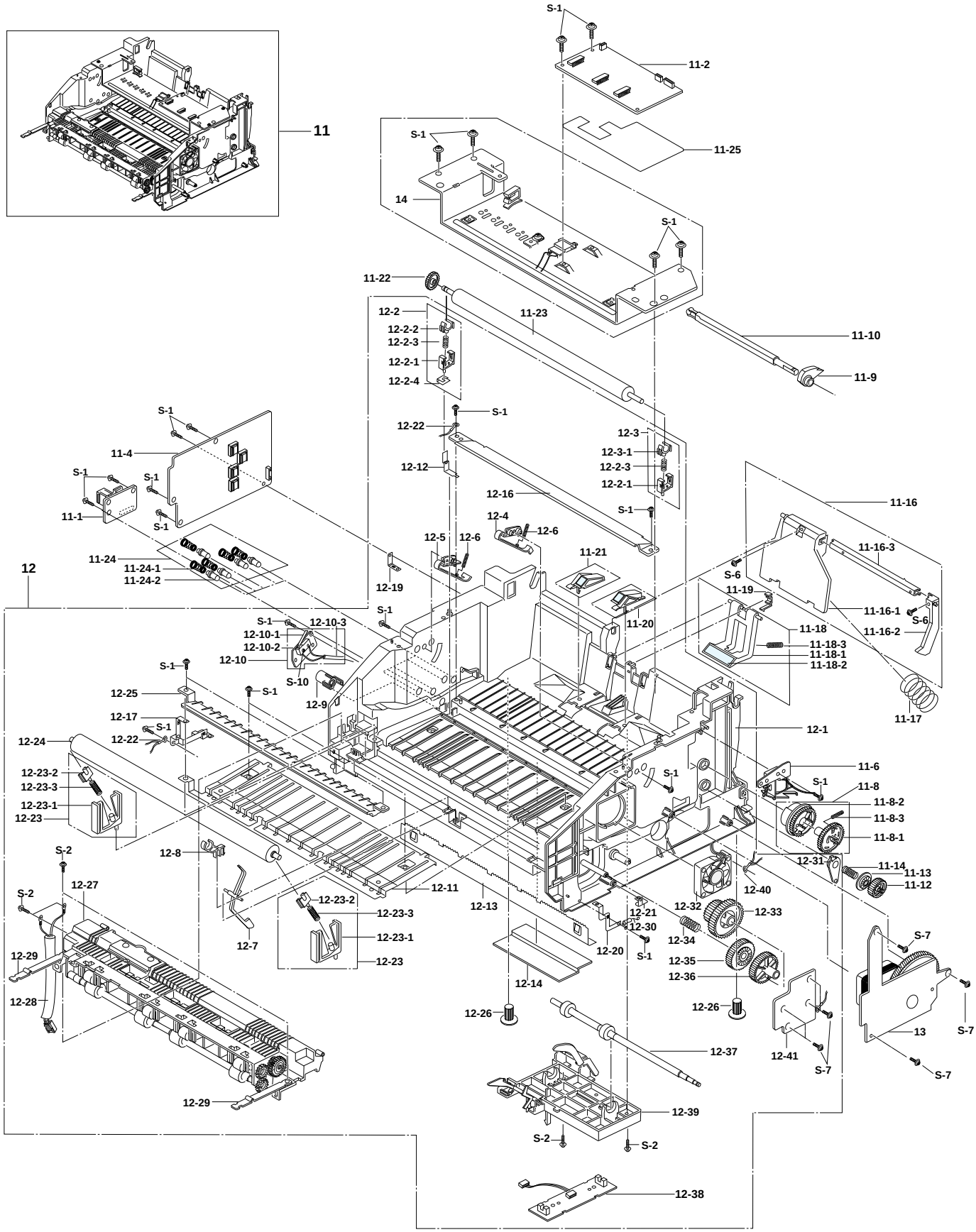

Engine/Frame Lower Assembly Parts Lists

LOCATION NO			.Description	CODE NO.	Q'TY	SA	Remark
11			ELA HOU-ENGINE ASS'Y	*	1		
	11-1		PBA-HOOK	JC92-01196A	1	O	
	11-2		PBA-ENGINE	JC92-01154A	1	O	
	11-4		PBA-HVPS	JC92-01184A	1	O	
	11-5		CBF-NARNESS THERMISTOR	JC39-00045A	1	O	
	11-6		UNIT-SOLENOID	JC33-0002A	1	O	
	11-7		CBF HARNESS-MAIN/SCAN	JC39-00040A	1	O	
	11-8		MEC-GEAR PICKUP	JC75-00056A	1	O	
		11-8-1	PMO-GEAR_PICKUP,1	*	1		
		11-8-2	PMO-GEAR_PICKUP,2	*	1		
		11-8-3	SPRING-PICKUP,GEAR	*	1		
	11-9		PMO-CAM_PICKUP	*	1		
	11-10		PMO-SHAFT_PICKUP	*	1		
	11-12		PMO-GEAR_FEED	JC72-00115A	1	O	
	11-13		PMO-CLUTCH_FEED	JC72-00116A	1	O	
	11-14		SPRING-CLUTCH	JC61-00012A	1	O	
	11-16		MEC-KNOCKUP ASSY	JC75-00053A	1	O	
		11-16-1	PMO-PLATE_KNOCKUP	*	1		
		11-16-2	PMO-CAM-KNOCKUP	*	1		
		11-16-3	IPR-BAR_KNOCKUP	*	1		
		S-6	SCREW-TAPTITE	*	2		
	11-17		SPRING-KNOCKUP	JC61-00023A	1	O	
	11-18		MEC-HOLDER PAD	JC75-00052A	1	O	
		11-18-1	PMO-HOLDER_PAD	*	1		
		11-18-2	RPR-PAD FRICTION	*	1		
		11-18-3	SPRING-PAD	*	1		
	11-19		PMO-CAP_PAD	JC72-00124A	2	O	
	11-20		MEC-SIDE PAD(R)	JC75-00051A	1	O	
	11-21		MEC-SIDE PAD(L)	JC75-00050A	1	O	
	11-22		PMO-GEAR_TRANSFER	JC72-00179A	1	O	
	11-23		ROLLER-TR(APOLLO)	JC75-00035A	1	O	
	11-24		MEC-TERMINAL	JC75-00049A	5	O	
		11-24-1	TERMINAL	*	1		
		11-24-2	SPRING-HV LARGE	*	2		

SA : Service Avail

LOCATION NO			.Description	CODE NO.	Q'TY	SA	Remark
	11-25		PCT-INSULATOR ENG BD	*	1		
	S-1		SCREW-TAPTITE	*	9		
12			ELA HOU-FRAME LOWER	JC96-01687A	1	O	For 220V
			ELA HOU-FRAME LOWER	JC96-01686	1	O	For 110V
	12-1		PMO-MAIN FRAME	*	1		
	12-2		MEA ETC-HOLDER TR L	*	1		
		12-2-1	PMO-HOLDER TR	*	1		
		12-2-2	PMO-BUSHING_TR(L)	*	1		
		12-2-3	SPRING-TR	*	1		
		12-2-4	IPR-PLATE_TR	*	1		
	12-3		MEA ETC-HOLDER TR R	*	1		
		12-2-1	PMO-HOLDER TR	*	1		
		12-3-1	PMO-BUSHING_TR(R)	*	1		
		12-2-3	SPRING-TR	*	1		
	12-4		PMO-CAP PLTE GU/DEV R	JC72-41135A	1	O	
	12-5		PMO-CAP PLTE GU/DEV L	JC72-41173A	1	O	
	12-6		SPRING-GUIDE DEVE	JC61-00038A	2	O	
	12-7		PMO-ACTUATOR_EXIT	*	1		
	12-8		PMO-HOLDER_EXIT	*	1		
	12-9		PMO-BUSHING_TERMINAL	*	1		
	12-10		ELA HOU-OPEN SENSOR	JC96-01584A	1	O	
		12-10-1	IPR-BRKT_SENSOR	*	1		
		12-10-2	SENSOR	*	1		
		12-10-3	CBF-HARNESS COVER	JC39-00041A	1	O	
		S-10	SCREW-TAPTITE	*	1		
	12-11		IPR-GUIDE-TR	*	1		
	12-12		IPR-PLATE-TERMINAL	*	1		
	12-13		IPR-SAW_PLATE	*	1		
	12-14		PCT-FILM SAW	*	1		
	12-16		IPR-EARTH_TRANS	*	1		
	12-17		IPR-GROUND_GUIDE	*	1		
	12-19		IPR-GROUND_HVPS	*	1		
	12-20		IPR-GROUND_FUSER	*	1		
	12-21		IPR-GROUND_DRV	*	1		
	12-22		CBF HARNESS-OPE GND	*	1		

SA : Service Avail

LOCATION NO			.Description	CODE NO.	Q'TY	SA	Remark
	12-23		MEA ETC-HOLDER PR	*	2		
		12-23-1	PMO-HOLDER_PR	*	1		
		12-23-2	BEARING-PR	JC66-10205A	1	O	
		12-23-3	SPRING-PR	*	1		
	12-24		MEC-ROLLER_PRESSURE	JC75-00027A	1	O	
	12-25		PMO-GUIDE_INPUT	*	1		
	12-26		RMO-RUBBER_FOOT	*	2		
	12-27		ELA HOU-FUSER ASS'Y	JC96-01621A	1		For 110V
			ELA HOU-FUSER ASS'Y	JC96-01632A	1		For 220V
	12-28		CBF-HARNESS FUSER	*	1		
	12-29		PHO-STOPPER EXIT	JC72-41396B	2	O	
	12-30		ELA HOU-MOTOR GND	*	1		
	12-31		PMO-BUSHING SHAFT	JG72-40849A	1	O	
	12-32		FAN-DC	3103-001071	1	O	
	12-33		PMO-GEAR_83/35	JC72-00154A	1	O	
	12-34		SPRING-FU DR	JC61-00016A	1	O	
	12-35		PMO-GEAR_FU_IN 47	JC72-00155A	1	O	
	12-36		PMO-GEAR_FU_OUT 47	JC72-00157A	1	O	
	12-37		MEC-ROLLER FEED	JC75-00054A	1	O	
	12-38		PBA-SENSOR	JC92-01197A	1	O	
	12-39		EMC-HOLDER FEED	JC75-00055A	1	O	
	12-40		CBF-HARNESS	JC39-00064A	1	O	
	12-41		IRP-BRACKET FVSER DRV	JC70-00108A	1	O	
13			EL A UNIT-RX DRIVE	JC75-00085AA	1	O	
	S-1		SCREW-TAPTITE	*	10		
	S-2		SCREW-TAPTITE	*	2		

SA : Service Avail

6-4 Fuser Assembly

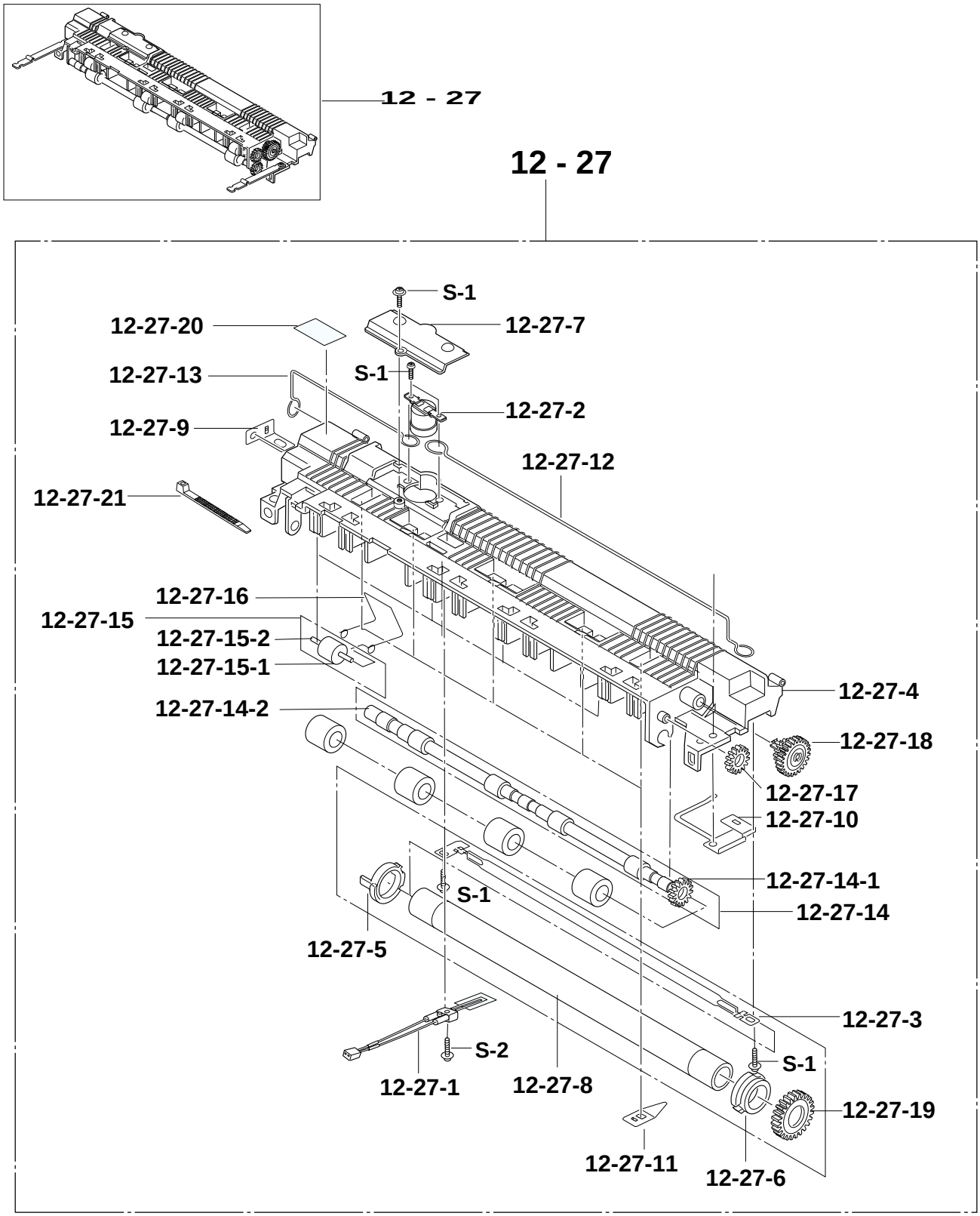

Fuser Assembly Parts Lists

LOCATION NO	.Description	CODE NO.	Q'TY	SA	Remark
12-27	ELA HOU-FUSER ASS'Y	JC96-01618A	1	O	For 110V
	ELA HOU-FUSER ASS'Y	JC96-01632A	1	O	For 220V
12-27-1	THERMISTOR-NTC	1404-001188	1	O	
12-27-2	THERMOSTAT-150C	4712-000001	1	O	
12-27-3	LAMP-HALOGEN	4713-001120	1	O	For 110V
12-27-3	LAMP-HALOGEN	4713-001121	1	O	For 220V
12-27-4	PMO-FUSER_UPPER	*	1		
12-27-5	PMO-BUSHING_HR,L	*	1		
12-27-6	PMO-BUSHING_HR,R	*	1		
12-27-7	PMO-COVER_THERMOSTAT	*	1		
12-27-8	MEC-ROLLER HEAT	JC71-00004A	1	O	
12-27-9	IPR-ELECTRODE_PLATE	*	1		
12-27-10	IPR-GROUND_FU	*	1		
12-27-11	IPR-CLAW_SEPARATOR	*	4		
12-27-12	ELECTRODE-WIRE,1	*	1		
12-27-13	ELECTRODE-WIRE,S	*	1		
12-27-14	MEA ETC-SHAFT EXIT	*	1		
12-27-14-1	PMO-SHAFT_EXIT(Z15)	*	1		
12-27-14-2	RMO-RUBBER_EXIT	*	4		
12-27-15	MEA ETC-ROLLER EXIT	*	1		
12-27-15-1	MEC-ROLLER EXIT	JC75-00037A	4	O	
12-27-15-2	IPR-PIN ROLLER EXIT	*	4		
12-27-16	SPRING-EXIT	*	4		
12-27-17	PMO-GEAR_EXIT_DRV16	*	1		
12-27-18	PMO-GEAR_EXIT_IDLE	*	1		
12-27-19	PMO-GEAR_FUSER,Z29	*	1		
12-27-20	LABEL HOT	*	1		
12-27-21	CABLE-TIE	*	1		
S-1	SCREW TAPTITE	*	5		
S-2	SCREW TAPTITE	*	1		

SA : Service Avail

6-5 RX Drive Unit Assembly

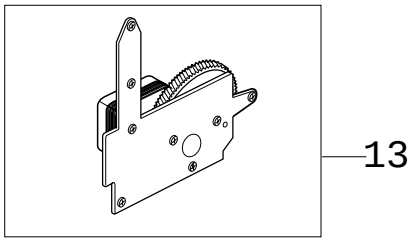

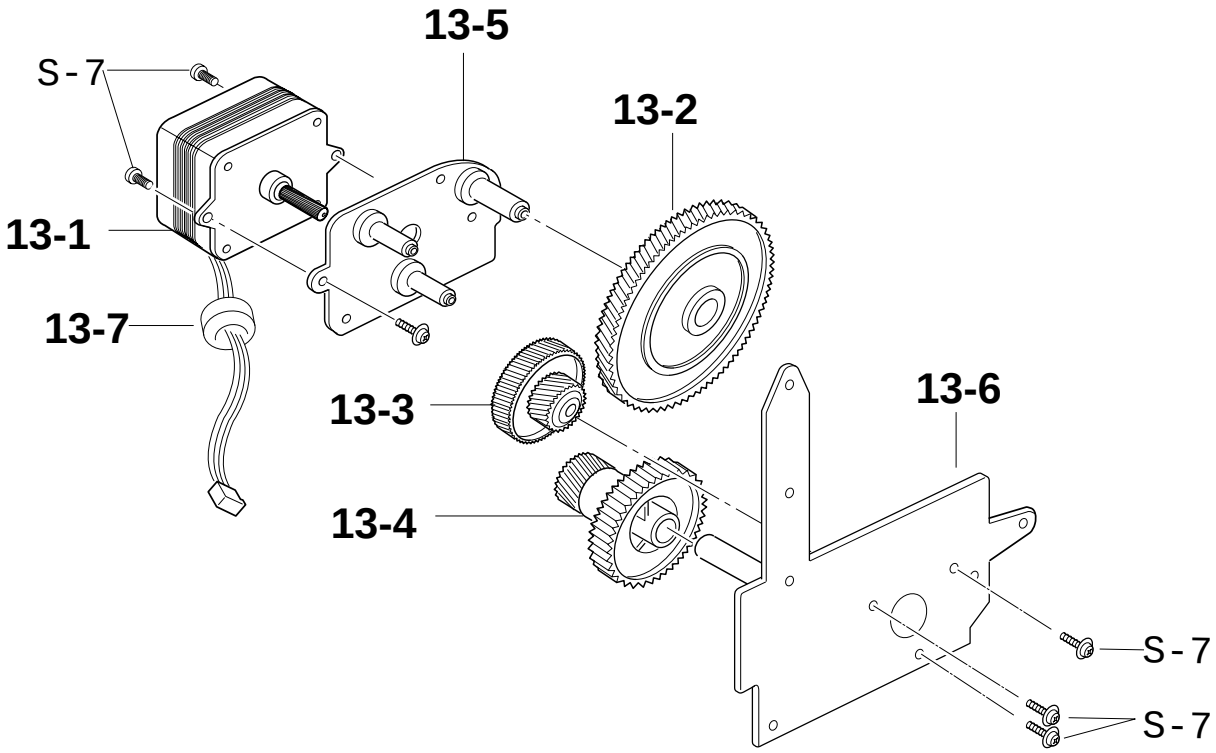

RX Drive Assembly Parts Lists

LOCATION NO		.Description	CODE NO.	Q'TY	SA	Remark
13		ELA UNIT-RX DRIVE	JC75-00085A	1	O	
	13-1	MOTOR-STEP	3101-001201	1	O	
	13-2	PMO-GEAR_71/28	*	1		
	13-3	PMO-GEAR_73/22	*	1		
	13-4	PMO-GEAR_132/19	*	1		
	13-5	IPR-BRACKET_MOTOR	*	1		
	13-6	IPR-BRACKET_GEAR	*	1		
	13-7	CORE-FERRITE	*	1		
	S-7	SCREW-MACHINE	*	5		

SA : Service Avail

6-6 Holder Feed Unit Assembly

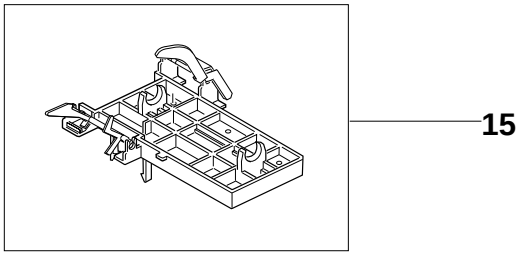

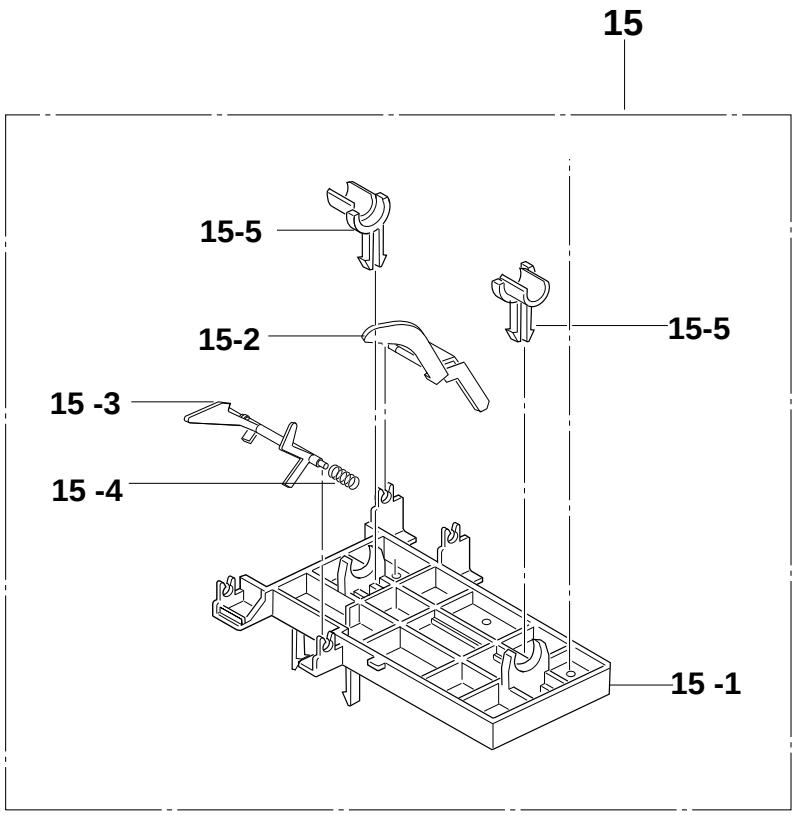

Holder Feed Unit Assembly Parts Lists

LOCATION NO		.Description	CODE NO.	Q'TY	SA	Remark
15		MEC-HOLDER FEED	JC75-00055A	1	O	
	15-1	PMO-HOLDER_FEED	*	1		
	15-2	PMO-ACTUATOR_EMPTY	*	1		
	15-3	PMO-ACTUATOR_FEED	*	1		
	15-4	SPRING-ACT,FEED	*	1		
	15-5	PMO-BUSHING_FEED	*	2		

SA : SVC Avail

6-7 Plate-Upper Unit Assembly

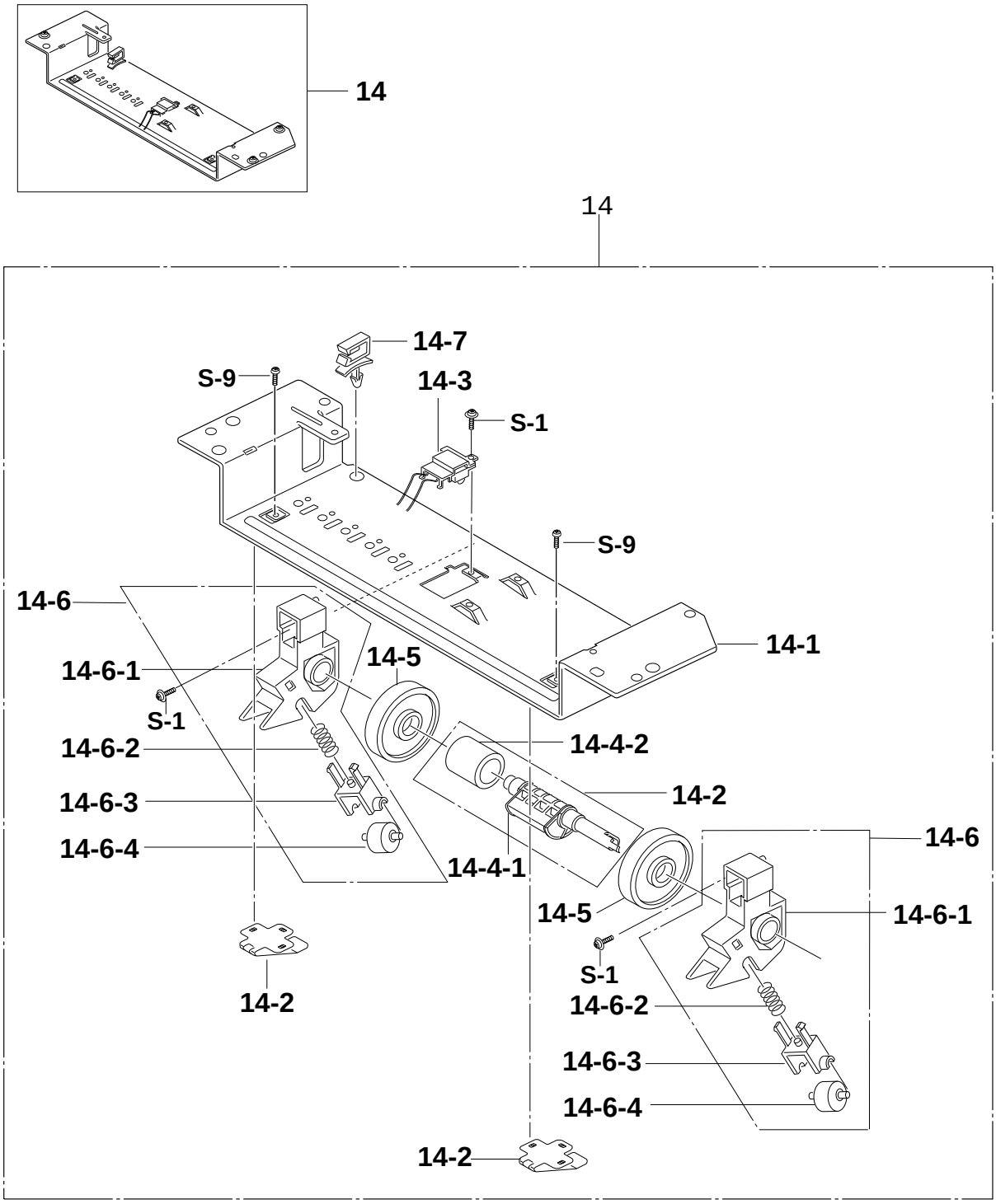

Plate-Upper Unit Assembly Parts Lists

LOCATION NO			.Description	CODE NO.	Q'TY	SA	Remark
14			MEC-PLATE-UPPER	JC75-00057A	1	O	
	14-1		IPR-UPPER-PLATE	*	1		
	14-2		IPR-PLATE SPRING	JC70-10223A	2	O	
	14-3		ELA UNIT-FUSE DEVE	JC96-01117A	1	O	
			CBF-HARNESS-2P	*	1		
			IPR-PLATE FUSE DEVE	*	2		
			PMO-CAP PLATE FU L	*	1		
			PMO-CAP PLATE FU U	*	1		
	14-4		MEA ETC-ROLLER PICKUP	*	1		
		14-4-1	PMO-HOUSING_PICKUP	*	1		
		14-4-2	RMO-ROLLER_PICKUP	*	1		
	14-5		PMO-IDLE_PICKUP	*	2		
	14-6		MEA ETC-IDLE FEED	*	2		
		14-6-1	PMO-HOLDER_PICKUP	*	1		
		14-6-2	SPRING-FEED	*	1		
		14-6-3	PMO-HOLDER_IDLE,FEED	*	1		
		14-6-4	IPR-ROLLER_IDLE,FEED	*	1		
	14-7		CABLE CLAMP	*	1		
	S-1		SCREW TAPTITE	*	3		
	S-9		SCREW TAPTITE	*	2		

SA : Service Avail

6-8 OPE Unit Assembly

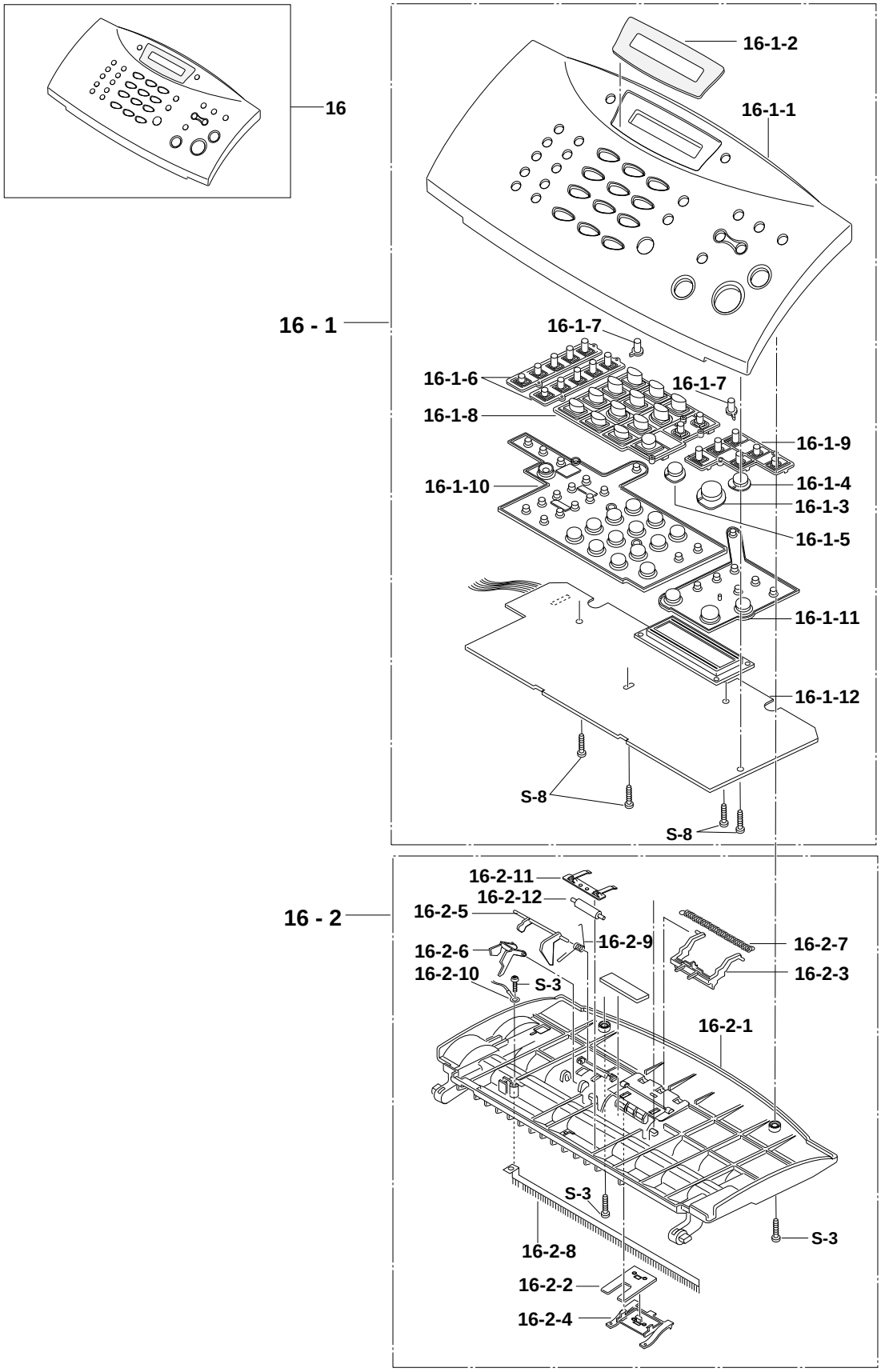

OPE Unit Assembly Parts Lists

LOCATION NO			.Description	CODE NO.	Q'TY	S/A	Remark
16			ELA HOU OPE-FRONT	refer the information	1	O	
	16-1		ELA HOU OPE ASSY	*	1		
		16-1-1	PMO-COVER OPE	*	1		
		16-1-2	PPR-WINDOW_LCD	*	1		
		16-1-3	KEY-START	*	1		
		16-1-4	KEY-COPY	JB72-00102A	1	O	
		16-1-5	KEY-STOP	JB72-00108A	1	O	
		16-1-6	KEY-ONE TOUCH	JC72-00409A	2	O	
		16-1-7	KEY-RESOLUTION	*	2		
		16-1-8	KEY-TEL	JB72-00100A	1	O	
		16-1-9	KEY-FUNCTION	JC72-00410A	1	O	
		16-1-10	RPR-CONTACT-RUBBER(A)	*	1		
		16-1-11	RPR-CONTACT-RUBBER(B)	*	1		
		16-1-12	PBA-MAIN OPE	JC92-01156A	1		
		S-8	SCREW-TAPTITE	*	4		
	16-2		ELA HOU SCAN UPPER	*	1		
		16-2-1	PMO-SCAN UPPER FRAME	*	1		
		16-2-2	RUBBER-ADF	JC73-00032A	1	O	
		16-2-3	SUPPORT-ADF	JG72-40043A	1	O	
		16-2-4	HOLDER-RUBBER	JG72-40044A	1	O	
		16-2-5	LEVER-SENSOR DOC	JB72-41247A	1	O	
		16-2-6	LEVER-SENSOR SCN	*	1		
		16-2-7	SPRING-COIL	JG70-40514A	1	O	
		16-2-8	ANTISTATIC-BRUSH	JB75-00051A	1	O	
		16-2-9	SPRING-SENSOR	*	1		
		16-2-10	CBF-HARNESS SCAN GND	*	1		
		16-2-11	IRP-PLATE PINCH ROLL	*	1		
		16-2-12	PMO-ROLLER PINCH STACKER	*	1		
		S-3	SCREW-TAPTITE	*	1		

SA : Service Avail

OPE Unit Assembly

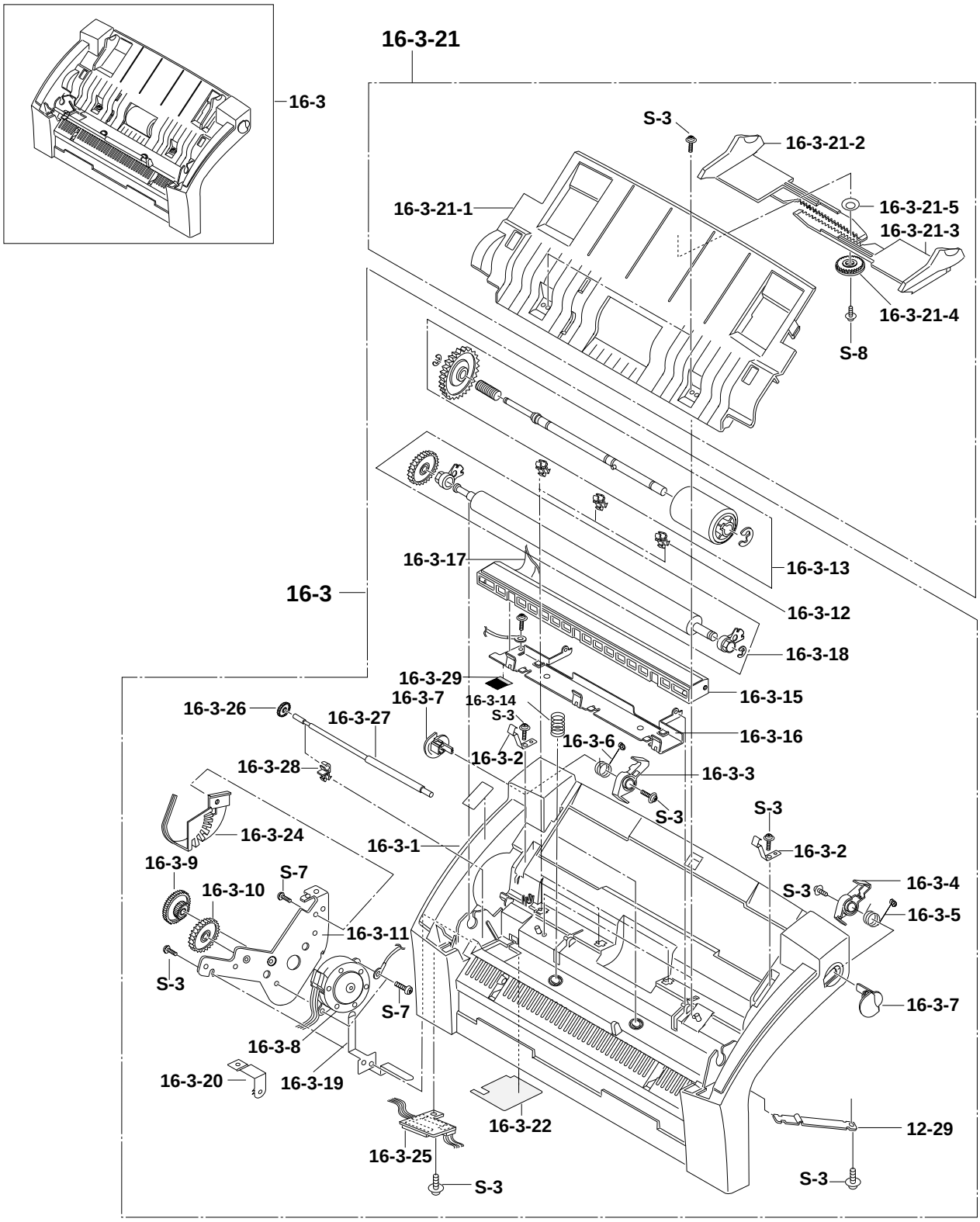

OPE Unit Assembly Parts Lists

LOCATION NO		.Description	CODE NO.	Q'TY	SA	Remark
	16-3	ELA HOU FRONT ASSY	*	1		
	12-29	STOPPER-EXIT	JC72-41396B	1	O	
	16-3-1	PMO-SCAN FRONT FRAME	*	1		
	16-3-2	LOCKER-TX	JG64-30001A	2	O	
	16-3-3	PMO-OPEN LOCKER L	*	1		
	16-3-4	PMO-OPEN LOCKER R	*	1		
	16-3-5	SPRING-LOCKER R	*	1		
	16-3-6	SPRING-LOCKER L	*	1		
	16-3-7	OPEN-BUTTON	*	2		
	16-3-8	SCAN MOTOR	3101-001203	1	O	
	16-3-9	PMO-GEAR_73/21/13	*	1		
	16-3-10	PMO-GEAR_IDLER-50	*	1		
	16-3-11	IPR-BRACKET_SCAN(0.85V)	*	1		
	16-3-12	PMO-BUSHING SHAFT	*	3		
	16-3-13	ELA HOU-ROLLER ADF	*	1		
	16-3-14	SPRING CIS	*	2		
	16-3-15	CONTACT IMAGE SENSOR	0609-001127	1	O	
	16-3-16	IPR-GUIDE_CIS	*	1		
	16-3-17	CBF HARNESS-SCAN/CIS(200)	JC39-00049A	1	O	
	16-3-18	MEA ETC-ROLLER WHITE	*	1		
	16-3-19	IPR-PLATE_GROUND	*	1		
	16-3-20	IPR-PLATE_GROUND A	*	1		
	16-3-21	ELA ETC GUIDE PAPER	*	1		
	16-3-21-1	PMO-GUIDE PAPER	*	1		
	16-3-21-2	PMO-GUIDE DOC L	*	1		
	16-3-21-3	PMO-GUIDE DOC R	*	1		
	16-3-21-4	PMO-GEAR PINION	JG66-40003A	1	O	
	16-3-21-5	SPRING-COVER	JF70-10616A	1	O	
	16-3-22	PPR-COVER SCAN	*	1		
	16-3-23	LABEL-CLEANING	*	1		
	16-3-24	PMO-COVER-GEAR	*	1		
	16-3-25	PBA-SCAN	*	1		
	16-3-26	GEAR SEACKER(Z20)	*	1		
	16-3-27	EMC-ROLLER STACKER	*	1		
	16-3-28	PMO-BUSHING SHAFT(EXIT)	*	1		
	16-3-29	EMC-BRUSH SHAFT	*	1		
	S-3	SCREW TAPTITE	*	10		
	S-7	SCREW MACHINE	*	3		
	S-8	SCREW TAPTITE	*	1		
	S-7	SCREW-TAPTITE	*	2		

SA : Service Avail

6-9 Cradle Unit Assembly

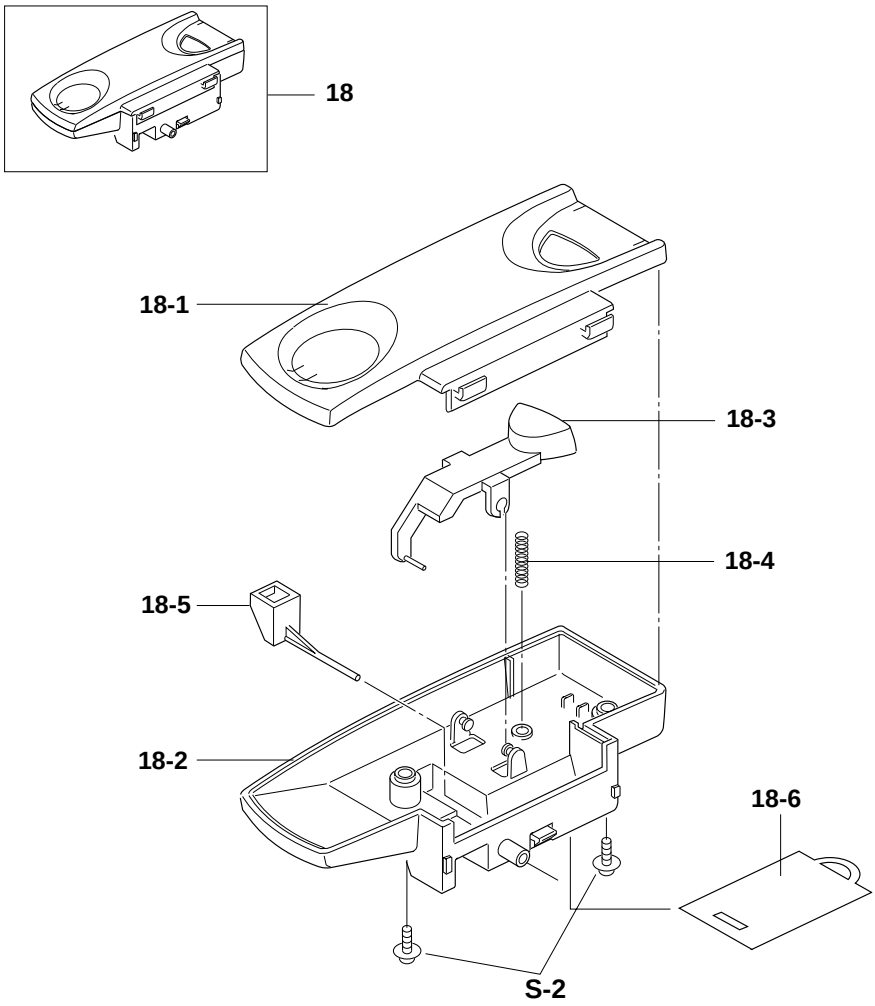

Cradle Unit Assembly Parts Lists

LOCATION NO		.Description	CODE NO.	Q'TY	SA	Remark
18		MEC-CRADLE	JC75-00083A	1	O	
	18-1	PMO-CRADLE UPPER	*	1		
	18-2	PMO-CRADLE LOWER	*	1		
	18-3	PMO-BUTTON HOOK	*	1		
	18-4	SPRING-HOOK	*	1		
	18-5	PMO-SLIDE HOOK	*	1		
	18-6	SHEET-ONETOUCH	JC72-00439A	1	O	
	S-2	SCREW-TAPTITE	*	2		

SA : Service Avail

6-10 Handset Assembly

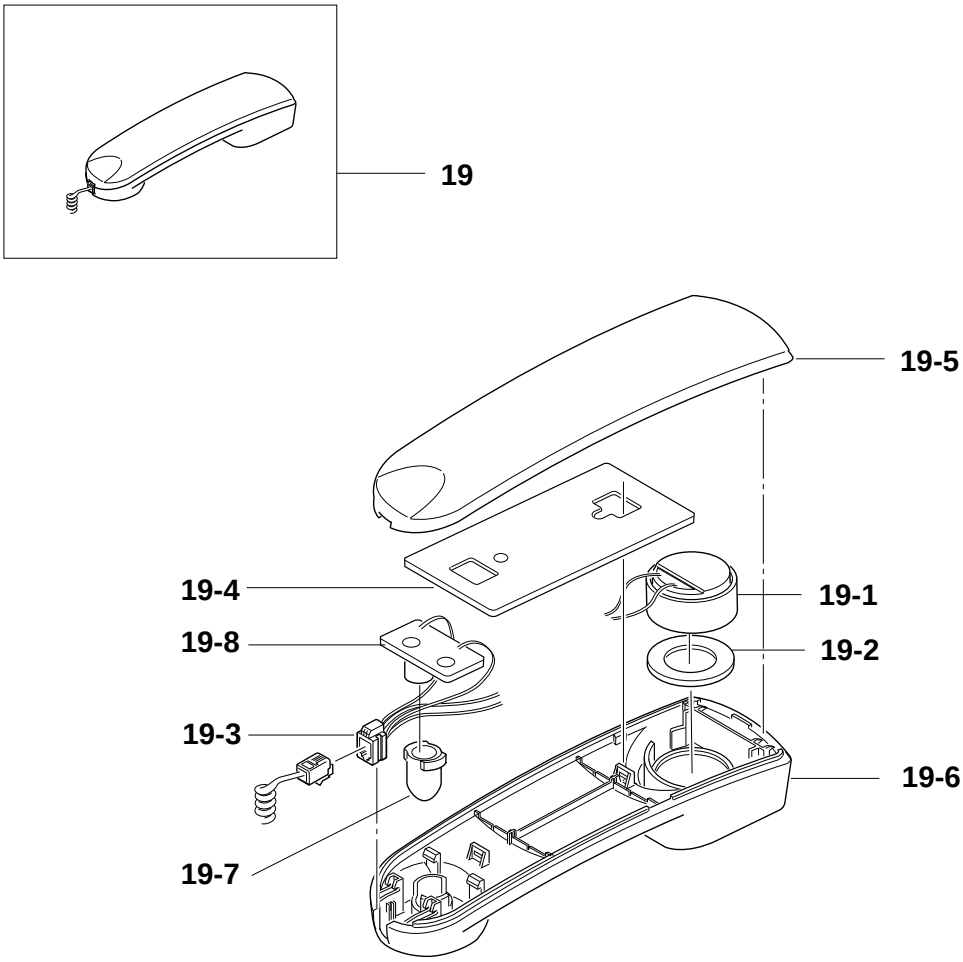

Handset Assembly Parts Lists

LOCATION NO		.Description	CODE NO.	Q'TY	SA	Remark
19		HANDSET	JC96-01629A	1	O	
	19-1	AUDIO-RECEIVER	*	1		
	19-2	RING-OP	*	1		
	19-3	CBF HARNESS-HADSET MODULAR	*	1		
	19-4	IPR-WEIGHT BALANCE	*	1		
	19-5	PMO-HANDSET UPPER	*	1		
	19-6	PMO-HANDSET LOWER	*	1		
	19-7	RMO-RUBBER MIC	*	1		
	19-8	PBA SUB ETC-MIC	*	1		

SA : Service Avail
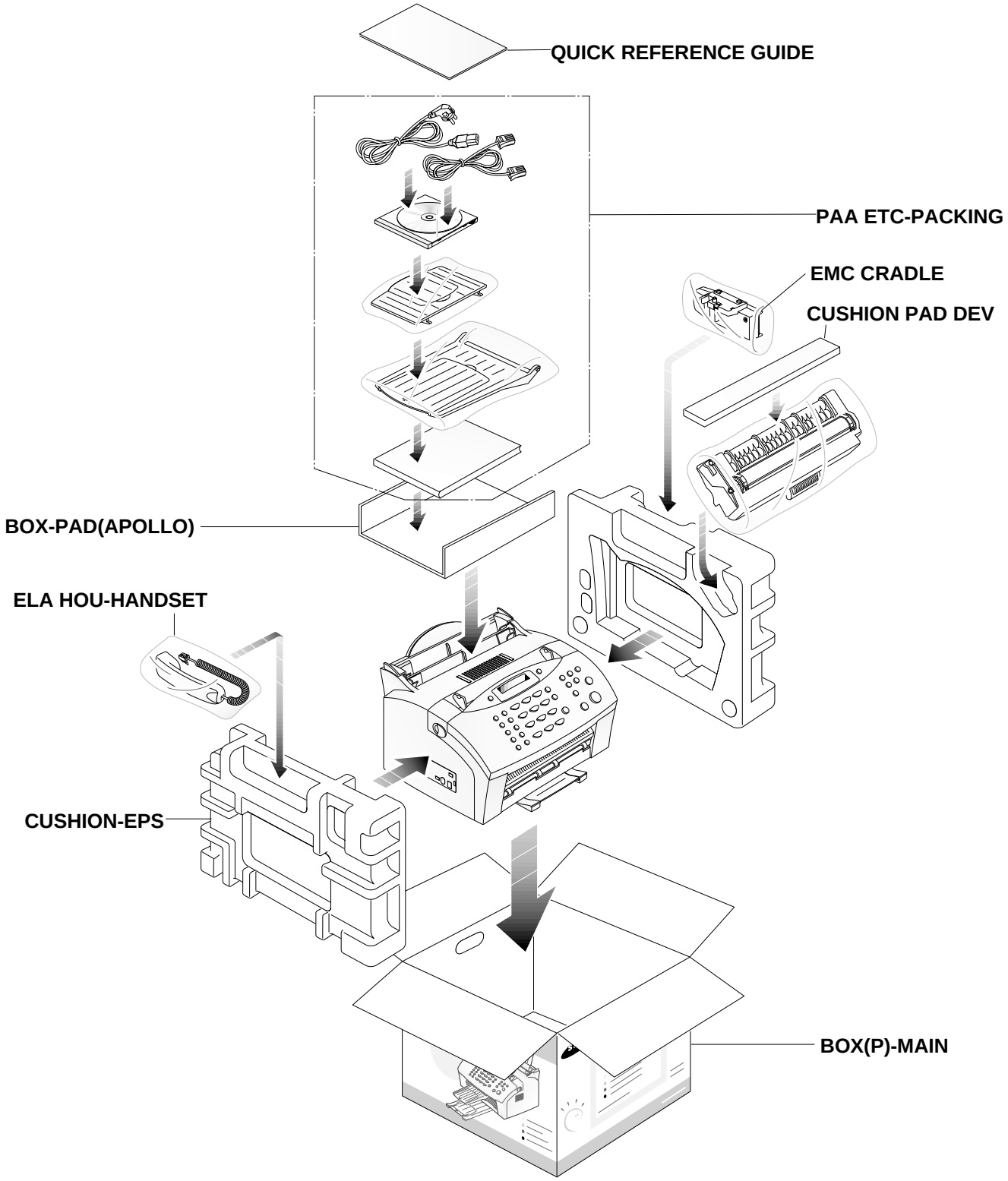
6-11 Packing Assembly